STAINLESS STEEL

14 & 16 GAUGE MULTI-STATION SINKS WITH TUBULAR LEGS & CROSS BRACING

KNEE OPERATED



FC-FM-40KV Shown



FC-FM-60KV Shown

Item #:_____ Qty #:_____

Model #:_____

Project #:_____

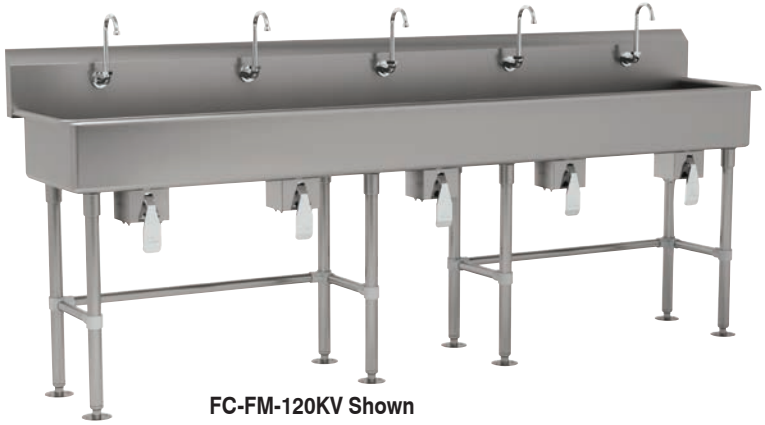

FC-FM-120KV Shown

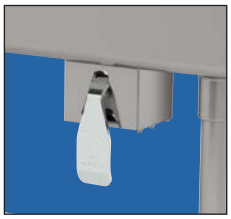

Knee Valves Included

FEATURES:

8 1/2" high backsplash.
8" sink bowl depth.
Stainless steel "Z" brackets.
3 1/2" **K-6** rear basket drains.
Tubular stainless steel legs with flanged feet.
Knee Operated: Includes **7-PS-32** knee valves and **K-121** spouts.

CONSTRUCTION:

All TIG welded.
Welded areas blended to match adjacent surfaces and to a satin finish.

MATERIAL:

All 14 or 16 gauge type "304" stainless steel.
1 5/8" tubular "304" stainless steel supports.

MECHANICAL:

Single faucet hole punch at each station.

STANDARD - 8" BOWL DEPTH				
# Of Stations	16 Gauge Sinks	14 Gauge Sinks	# of Spouts	# of Valves
2	FC-FM-40KV	FS-FM-40KV	2 Spouts	2 Valves
2	FC-FM-48KV	FS-FM-48KV	2 Spouts	2 Valves
3	FC-FM-60KV	FS-FM-60KV	3 Spouts	3 Valves
3	FC-FM-72KV	FS-FM-72KV	3 Spouts	3 Valves
4	FC-FM-80KV	FS-FM-80KV	4 Spouts	4 Valves
4	FC-FM-96KV	FS-FM-96KV	4 Spouts	4 Valves
5	FC-FM-100KV	FS-FM-100KV	5 Spouts	5 Valves
6	FC-FM-120KV	FS-FM-120KV	6 Spouts	6 Valves

⚠ **WARNING:** Equipment that include faucets on this page may contain a chemical known to the State of California to cause cancer, birth defects or other reproductive harm.

ADVANCE TABCO SMART FABRICATION™
www.advancetabco.com

Customer Service Available To Assist You 1-800-645-3166 8:30 am - 7:00 pm E.S.T.

For Orders & Customer Service:
Email: customer@advancetabco.com or Fax: 631-242-6900

For Smart Fabrication™ Quotes:
Email: smartfab@advancetabco.com or Fax: 631-586-2933

DETAILS and SPECIFICATIONS

TOL ± .500” | FITTINGS SUPPLIED AS SHOWN | ALL DIMENSIONS ARE TYPICAL

STAINLESS STEEL

MULTI-STATION SINKS WITH TUBULAR LEGS & CROSS BRACING

KNEE OPERATED

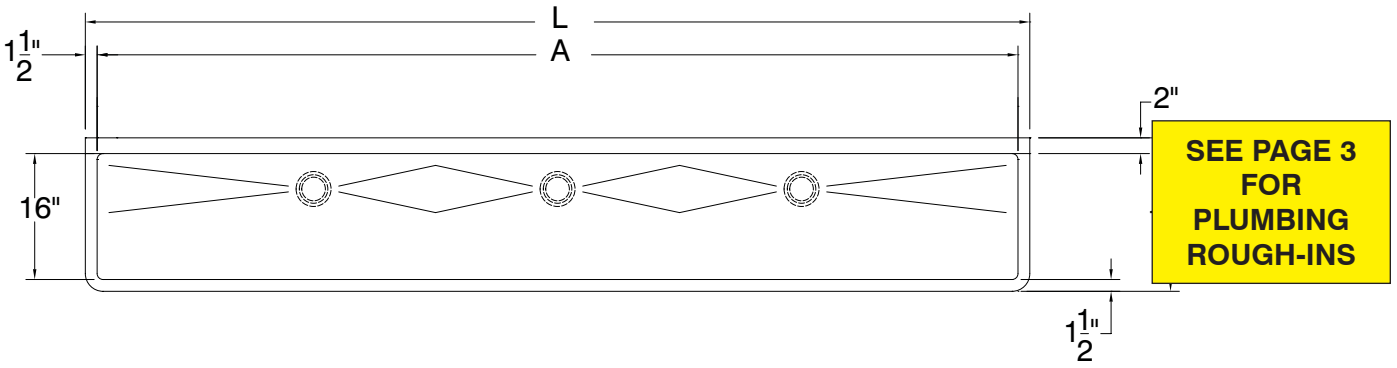

SEE PAGE 3 FOR PLUMBING ROUGH-INS

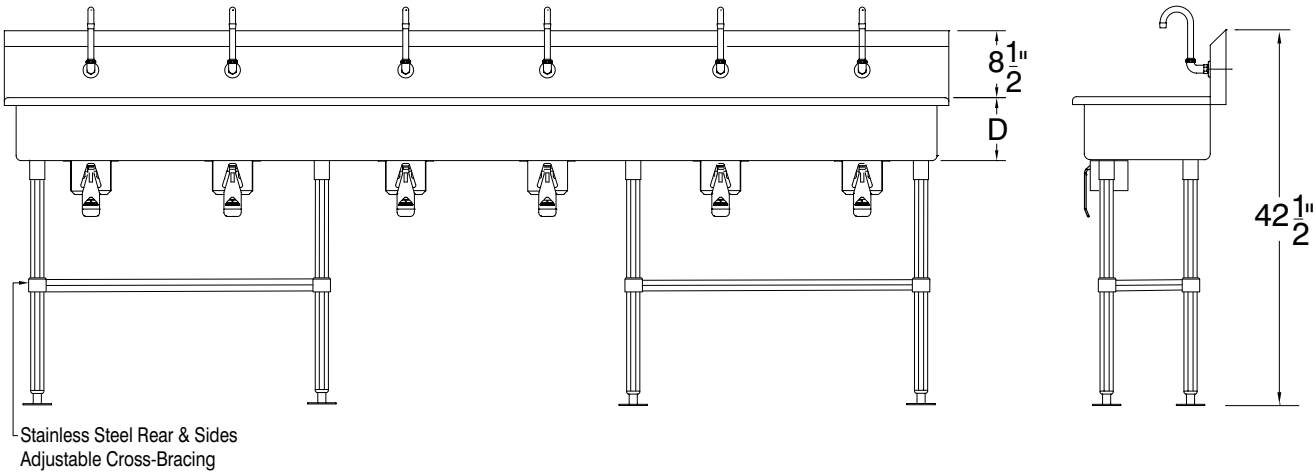

# Of Stations	L	16 Gauge Sinks	Wt.	16 Gauge Sinks	Wt.	A	# Of Drains	# Of Faucets	Cu.
STANDARD - 8” DEPTH									
2	40"	FC-FM-40KV	82	FS-FM-40KV	96	37"	1	2	15
2	48"	FC-FM-48KV	92	FS-FM-48KV	102	45"	1	2	16
3	60”	FC-FM-60KV	105	FS-FM-60KV	125	57"	1	3	22
3	72”	FC-FM-72KV	110	FS-FM-72KV	131	69"	1	3	23
4	80"	FC-FM-80KV	130	FS-FM-80KV	150	77"	2	4	28
4	96"	FC-FM-96KV	145	FS-FM-96KV	175	93"	2	4	30
5	100"	FC-FM-100KV	165	FS-FM-100KV	192	97"	2	5	35
6	120"	FC-FM-120KV	198	FS-FM-120KV	228	117"	3	6	42

325 Wireless Boulevard, Hauppauge, NY 11788

ADVANCE TABCO is constantly engaged in a program of improving our products. Therefore, we reserve the right to change specifications without prior notice.

© ADVANCE TABCO, AUGUST 2026

PLUMBING ROUGH-INS

TOL ± .500” | FITTINGS SUPPLIED AS SHOWN | ALL DIMENSIONS ARE TYPICAL

STAINLESS STEEL

MULTI-STATION SINKS WITH TUBULAR LEGS & CROSS BRACING

KNEE OPERATED

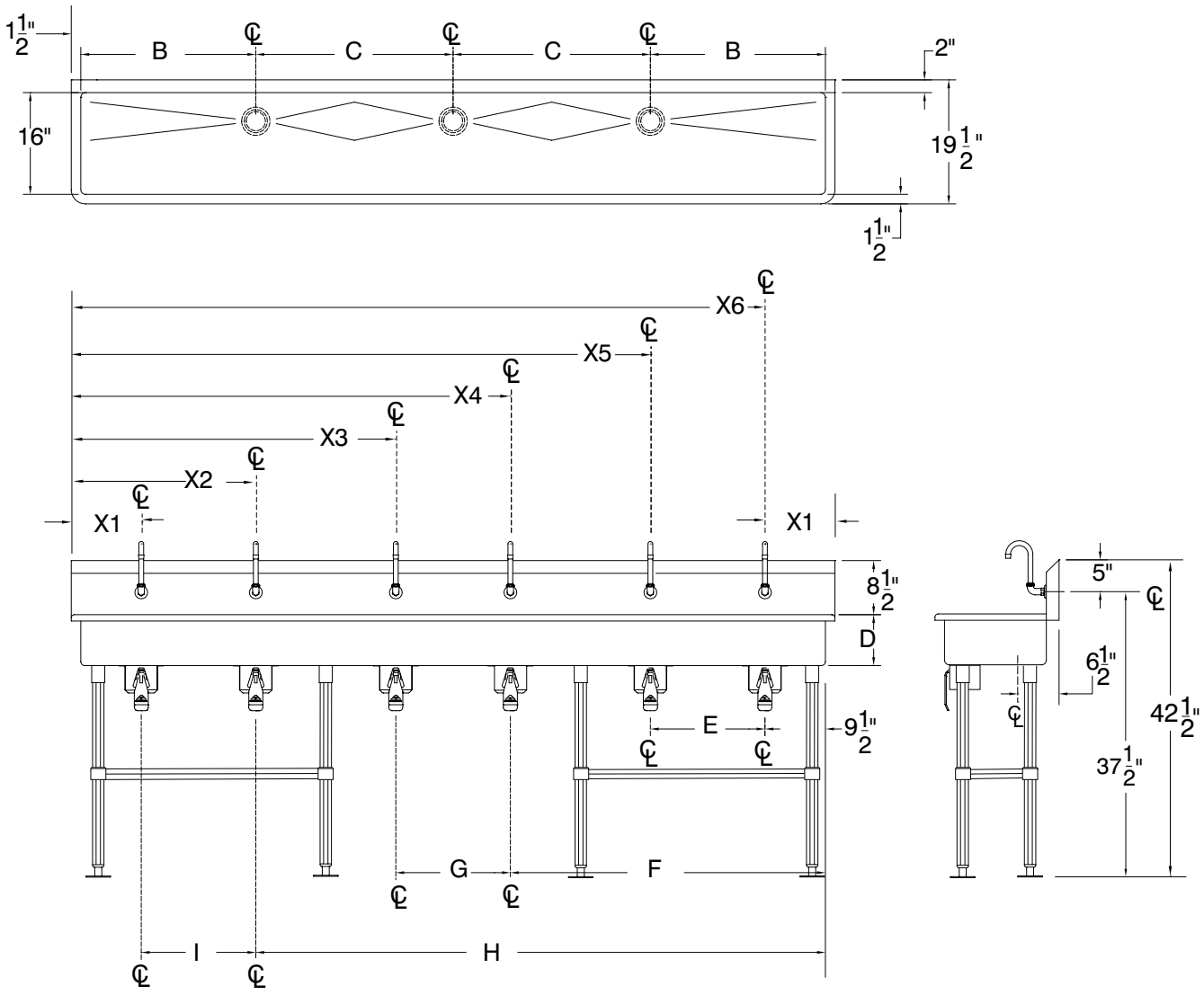

# Of Stations	L	Model	B	C	D	E	F	G	H	I	X1	X2	X3	X4	X5	X6
STANDARD - 8” DEPTH																
2	40"	FC-FM-40KV	18 1/2"	N/A	8"	18"	N/A	N/A	N/A	N/A	11"	18"	N/A	N/A	N/A	N/A
2	48"	FC-FM-48KV	22 1/2"	N/A	8"	13 1/2"	31 1/2"	N/A	N/A	N/A	15"	33"	N/A	N/A	N/A	N/A
3	60”	FC-FM-60KV	28 1/2"	N/A	8"	19"	19"	N/A	N/A	N/A	11"	19"	19"	N/A	N/A	N/A
3	72”	FC-FM-72KV	34 1/2"	N/A	8"	15 1/2"	32 1/2"	51 1/2"	N/A	N/A	17"	36"	55"	N/A	N/A	N/A
4	80"	FC-FM-80KV	38 1/2”	N/A	8"	18"	22"	18"	N/A	N/A	11"	18"	22"	18"	N/A	N/A
4	96"	FC-FM-96KV	24 1/32"	N/A	8"	13 1/2"	35 1/2"	57 1/2"	79 1/2"	N/A	15"	37"	59"	81"	N/A	N/A
5	100"	FC-FM-100KV	27 1/2"	42"	8"	19.5"	48.5"	19 1/2"	68"	19.5"	11"	19.5"	19.5"	19.5"	19.5"	19.5"
6	120"	FC-FM-120KV	27 1/2"	31"	8"	18"	49.5"	18"	89.5"	18"	7"	25"	47"	65"	87"	105"

ADVANCE TABCO
SMART FABRICATION™

ADVANCE TABCO is constantly engaged in a program of improving our products. Therefore, we reserve the right to change specifications without prior notice.

325 Wireless Boulevard, Hauppauge, NY 11788
© ADVANCE TABCO, AUGUST 2026